Translated from German to English - www.onlinedoctranslator.com

IAA II DCF / DCF HT
Intelligent active antenna DCF / DCF HT

Operation and configuration

1 Configuration of the Intelligent Active Antenna

The intelligent DCF active antenna receives the DCF77 time signal transmitter, broadcast at a carrier frequency of 77.5 kHz. The device evaluates the DCF77 signal, decodes the contained time information, and makes it available as an output signal in various forms.

The various operating modes of the intelligent active antenna are selected by configuring a 4-position DIL switch [A, B, C, D]. All possible configurations are listed in the table below. It is recommended to make the desired settings before connecting the operating voltage. A selected configuration can be changed at any time, even during operation, taking into account the electrical connection conditions (X1.1 ÷ X1.4). The device will then automatically switch to the newly selected operating mode at the next second.

By configuring the DIL switches, both the type of signal to be output (signal source) and the type of electrical signal output can be determined.

The following variants are available:

1.1 Selecting the output signal source **(Which signal?)**

a) DCF77 - Signal, original
b) DCF77 - Signal, tested
c) Send serial time information (RS232 comp. /300 bps)

1.2 Selecting the output signal level **(How issued?)**

a) ... d) Voltage output: Framework:		Terminal voltage ($U_B = U_{X1.1-X1.2}$)	$5V \le U_B \le 30V$
e) ... h) Current loop:	Framework conditions:	Terminal voltage ($U_B = U_{X1.1-X1.2}$)	$8V \le U_B \le 30V$
		Current level LOW	$I < 5$ mA
		HIGH	$I \ge 10$ mA

Output signal with configured voltage output

(Depending on the selected configuration 4.1 or 4.2, the voltage level is determined by the terminal voltage UB or UA.)

Output signal with configured current output

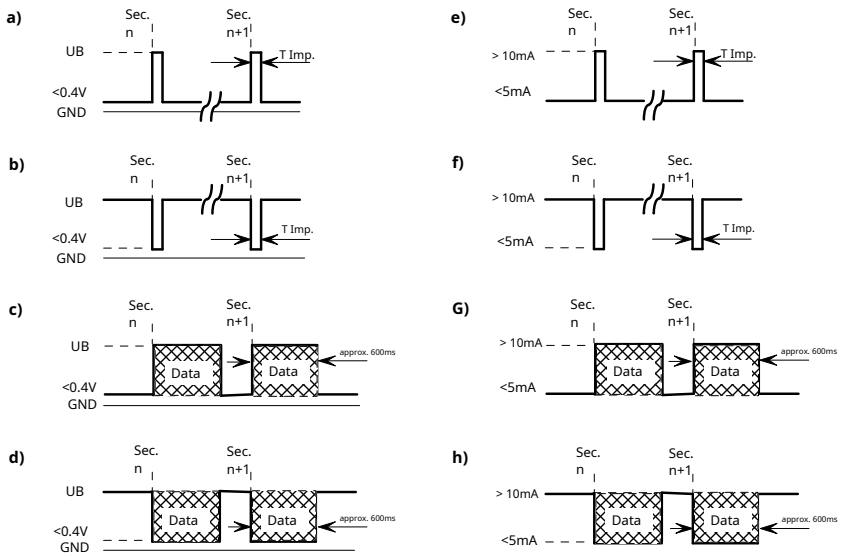

1.3 Connection and configuration elements on the circuit board

Figure 1 shows a symbolic representation of the circuit board with:

a) Position and designation of terminal X1; connections 1 ... 4 Position and
b) designation of configuration switch J2 (4-pin DIL switch)
c) Position and designation of the LED indicators for function and alignment control (D11 or D2 ... D5) Position
d) and designation of the START button (S1) for manually initiating a reception attempt

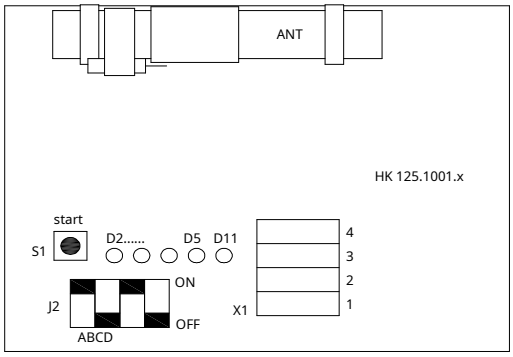

Image 1:

Symbolic representation of the connection and configuration elements on the circuit board

1.4 DIL switch configurations

Config. No.		Switch ABCD	Signal source (which signal to output)	Type of issue (Signal as output)	Output signal (see point 1.2)
0	ON OFF		Decoded serial time information (RS232 / 300bps compatible)	current loop	h)
1	ON OFF		Decoded serial time information (RS232 / 300bps compatible)	Current loop inverted	G)
2	ON OFF		Decoded serial time information (RS232 / 300bps compatible)	Tension	d)
3	ON OFF		Decoded serial time information (RS232 / 300bps compatible)	Voltage inverted	c)
4	ON OFF		Original DCF77 signal	Current loop, DCF	f)
5	ON OFF		Original DCF77 signal	Current loop, / DCF	e)
6	ON OFF		Original DCF77 signal	Tension; DCF	b)
7	ON OFF		Original DCF77 signal	Tension, / DCF	a)
8	ON OFF		Tested DCF77 signal	Current loop, DCF	f)
9	ON OFF		Tested DCF77 signal	Current loop, / DCF	e)
10	ON OFF		Tested DCF77 signal	Tension, DCF	b)
11	ON OFF		Tested DCF77 signal	Tension, / DCF	a)
12	ON OFF		Reserved	–	–
13	ON OFF		Reserved	–	–
14	ON OFF		Reserved	–	–
15	ON OFF		Reserved	–	–

Notes: The values for "Voltage H" and "Voltage L" depend on the respective output stage.
Configurations 12 ÷ 15 are redundant or reserved for special functions.

2 Testing and display of reception quality via an internal LED chain(D2...D5, red)

The intelligent active antenna has a 4-digit red LED chain inside the device, which helps determine the optimal device orientation during installation as follows:

Radio reception begins immediately after the device is switched on (POWER-ON Reset) or by pressing the S1 ("Start") button. The reception of the time signal is performed and evaluated within the following minutes. The number of illuminated red LEDs indicates the level of reception interference.

The goal is to align the intelligent active antenna during installation so that as many red LEDs as possible are off. The resulting alignment of the device ensures favorable reception conditions for the time signal and thus the necessary prerequisites for successful use of the device.

Align the device gradually. Pause for a few seconds in each new position to allow the device to evaluate the signal and establish a stable display in the LED chain. Then, fix the device in the position where all red LEDs are off (interference-free reception).

Radio reception, triggered by a power-on reset (initial reception) or by pressing the "START" button, takes approximately 3 minutes under interference-free reception conditions. In the event of poor reception conditions, the initial reception is aborted after a maximum of 10 minutes. The LED control display is only active during these reception attempts. If the suitable mounting orientation cannot be found during this time, a new reception attempt can be initiated and the alignment process continued by pressing the "START" button.

3 Display of the pulse of the received time signal via internal LED(D11, green)

For the duration of the initial reception or for the duration of the reception attempts (receiver active), which are started via the S1 button, the received time signal pulses are made visible according to their pulse duration using a green LED (D11).

According to the DCF77 signal, the LED (D11) is activated for 100 ms or 200 ms at the beginning of each second. Correctly received pulses generate clearly recognizable ON phases of the LED; improperly received pulses (low field strength, poorly aligned device, external interference nearby) produce an unsteady flickering.

After a power-on reset, it takes about 20 s ... 30 s until the receiver reaches its stable operating mode and the green LED generates an evaluable display.

4 Output signal

4.1 Voltage output with output level = U_B

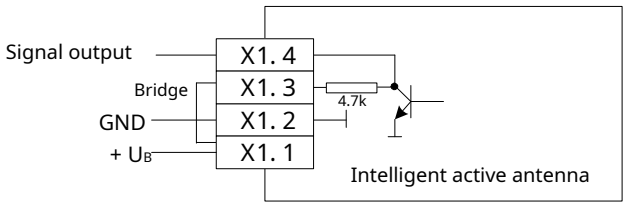

An internal 4.7kΩResistance is created by the bridge switched on!

4.2 Voltage output with open collector

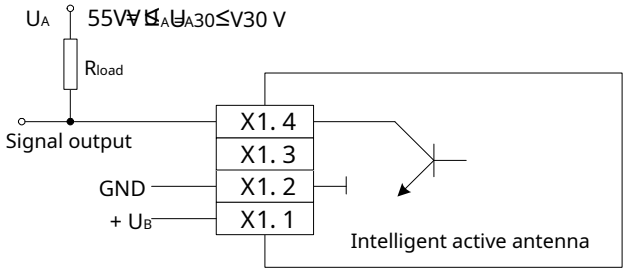

The open collector resistor (R_{load}) must be provided in the user device!

4.3 Current output

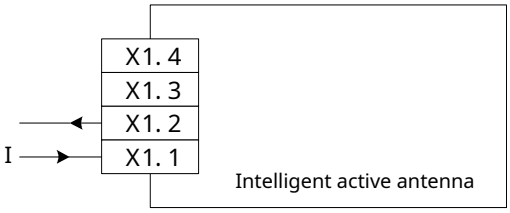

required terminal voltage ($U_B = U_{X1.1-X1.2}$): $8V \leq U_B \leq 30V$

5 **Serial time log**(RS232 compatible / 300 bps)

In the signal source configuration “send decoded serial time information”, the time information is derived from the device’s internal time base, which is regularly synchronized to the time signal.

The information content of the characters is based on the DCF77 time signal protocol.

The intelligent active antenna transmits 16 characters at the beginning of each second. The first 15 characters contain the complete time information. Character 16 is always the final <CR> (carriage return). The protocol always starts at the beginning of the second, which is indicated by the first edge of the start bit of the first character (the tens of the hour).

5.1 Transmission parameters

speed	300 bps
Data bits	7
Parity bit	straight
Stop bits	2

5.2 Data content

The individual characters have the following meaning:

1. Hourly tenner
2. Hour one
3. Minute tens
4. Minute one
5. Second tens
6. Second One
7. Weekday 1 (Monday) ... 7 (Sunday)
8. Daily Tenner
9. Day One

10th monthly tenner
11th month
12th decade
13th annual

14. Bits 0 - 3 contain protocol bits 16 - 19 of the DCF77 protocol

Bit7	parity	
Bit6	always 0	
Bit5	always 1	
Bit4	always 1	
Bit3	Announcement leap second, =1 during CET, =0	(Bit 19 of the DCF77 protocol)
Bit2	during CEST =0 during CET, =1 during CEST	(Bit 18 of the DCF77 protocol)
Bit1	Announcement change CET-CEST and vice versa	(Bit 17 of the DCF77 protocol)
Bit0		(Bit 16 of the DCF77 protocol)

15. Status

Bit7	parity
Bit6	always 0
Bit5	always 1
Bit4	always 1
Bit3	always 0
Bit2	=1 if a radio reception was aborted unsuccessfully<u>and</u> no valid time information is available yet. This can occur after a reset under poor reception conditions. This bit is reset upon the first successful reception and then remains 0.
Bit1	=1 if the previous reception attempt was successful =0 if the previous reception attempt was unsuccessful =1 if valid time information is
Bit0	available (internal time base OK) =0 after reset; is set to =1 with the first successful reception attempt. <CR>

16. End =carriage return; 0D (hex) or 00001101 (binary)

6 DCF77 signal

In the signal source configuration “DCF77 signal original”, the device receives the DCF77 signal, demodulates it and makes this demodulated DCF77 signal available directly or inverted at the output.

In the "DCF77 signal tested" signal source configuration, the device receives the DCF77 signal, demodulates and decodes it, and uses the obtained information to synchronize the internal time base with the DCF77 time signal transmitter. From this time base, the device generates the tested DCF77 protocol, which is provided as an output signal.
However, after the device has been put into operation, the signal output is suppressed until the initial reception has been successfully completed and a valid time base is available.

6.1 DCF77 signal, original

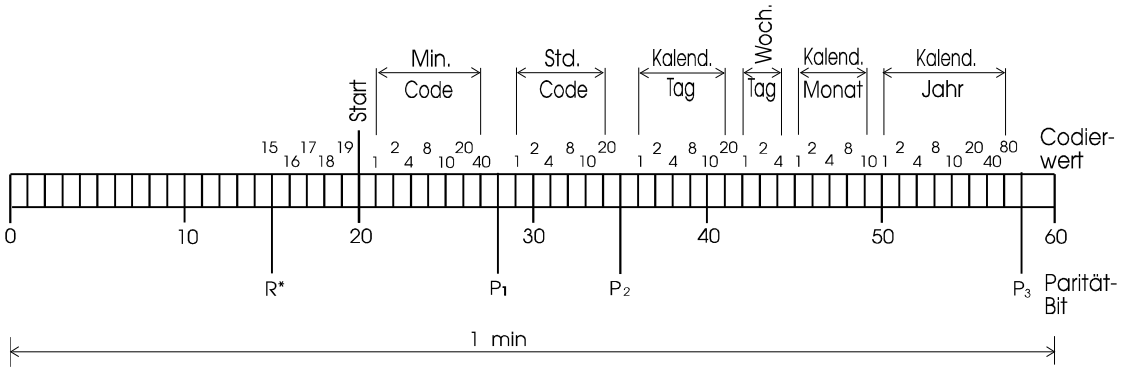

6.2 DCF77 signal, tested

In the "DCF77 signal tested" signal source configuration, the intelligent active antenna is responsible for autonomously providing the tested DCF77 time telegram. To do this, the device uses its internal time base, which is automatically synchronized with the DCF77 transmitter several times a day (see section 7).

A binary "0" is encoded with a 100 ms pulse, a binary "1" with a 200 ms pulse. The pulse length tolerances are a maximum of ±10 ms. The falling edge (when low-active) or the rising edge (when high-active) of this pulse always falls at the beginning of the second.

The intelligent active antenna processes bits 16 ... 58 of the received, original DCF77 time signal.

The transmitted time telegram corresponds to the original DCF77 time telegram with the following exceptions:

a) Bits 0...14 of the DCF77 time telegram are not evaluated by the intelligent active antenna and are always coded with 0 at their output.

b) Bit 15 (R*) in the DCF77 time telegram indicates the use of the reserve antenna. The intelligent active antenna does not evaluate this bit and instead indicates the radio reception status. At the output of the intelligent active antenna, this bit is coded with 1 if the previous reception attempt<u>not</u> was successful.

In the original DCF77 time telegram, the pulse at the 59th second is always omitted. The DCF77 protocol generated by the intelligent active antenna and available at the output also does not contain a pulse at the 59th second.

The tested DCF77 signal is only output after the initial reception has been successfully completed and the associated synchronization of the internal time base to the DCF77 transmitter.

7 Radio reception

After applying the operating voltage and running through an internal test routine, the intelligent active antenna immediately begins receiving radio signals. Depending on the device configuration, the received DCF77 signal is fed to the signal output either in its original form (as a demodulated DCF77 signal) or in a processed form (as a tested DCF77 signal or as decoded, complete, serial time information).

Radio reception after the reset (initial reception) lasts approximately 3 minutes under interference-free reception conditions. The successfully decoded, complete time information then serves as the basis for the device's internal time base. After the initial successful reception, further reception attempts are automatically initiated every hour, at the 45th minute. Additional reception attempts during device installation and antenna alignment can be initiated using the START button S1.

The duration of each reception attempt is limited to a maximum of 10 minutes. However, under good reception conditions, they are successfully completed much sooner. Received time telegrams are subjected to a triple check. Only when all conditions are met is the corresponding time telegram entered into the device's time register as valid time information.

Notice :

After applying the operating voltage, the device's time registers operate like a counter, starting at 0:00 until the register contents are updated by the data of a verified DCF77 telegram. This means that a correct, verified DCF77 signal or correct serial time information is only available at the signal output after the DCF77 signal has been successfully received.

The validity of the serially output time information is described by status bits in character 15.
The output of the tested DCF77 signal is even suppressed until the internal time base shows a current, correct time.

If an initial reception fails after the device is switched on, a new reception attempt is automatically initiated every hour at the 45th minute of the internal time base until a successful reception is achieved. The device then enters the reception mode described above.